Utmost®

品质与艺术完美结合

艾坦姆流体控制技术（北京）有限公司
Utmost Flow Control Tech.(Beijing) Co.,Ltd

艾坦姆
G115/G155系列深冷控制阀
Utmost G115 and G155 Series Cryogenic Control Valve

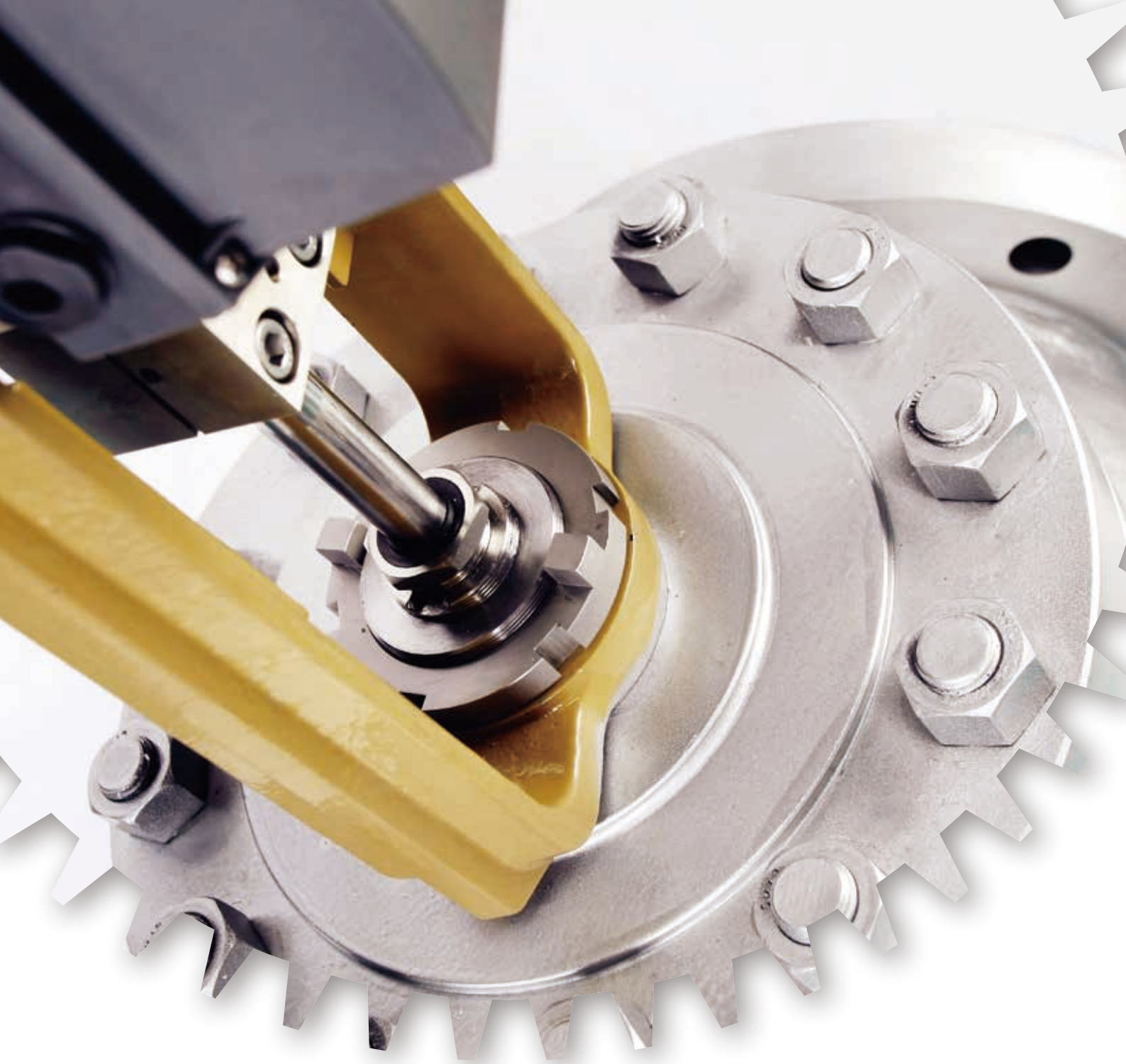

艾坦姆
G115/G155 系列深冷控制阀

Utmost G115 and G155 Series Cryogenic Control Valve

Utmost®

G115,G155 系列低温控制阀技术数据
Technical Data Sheet of G115 and G155 Series Cryogenic Control Valve

基本规格 General Data

低温阀 Cryogenic Control Valve	G115	G155
公称尺寸 Nominal Size DN /NPS	DN15~DN400 1/2'' ～ 16''	DN15~DN300 1/2'' ～ 12''
压力等级 Nominal Pressure PN / ANSI	PN16-40 ANSI 150/300	PN63-250 ANSI 600-1500
流量特性 Characteristics	等百分比或线性 Equal Percentage or Linear	
可调比 Rangeability	50:1	
阀芯导向 Plug Guide	阀杆导向 Stem Guided, 双导向 Double Guiding	
泄漏等级 Seat Leakage	金属硬密封 IV 级 Metal sealing: IEC 60534-4 leakage class IV 金属硬密封 V 级 Metal sealing: IEC 60534-4 leakage class V	
波纹管密封 Bellow Sealing (option)	无缝双壁波纹管，标准材质 316SS Seamless, double walled, made of 316SS	
填 料 Packing	聚四氟乙烯填料 PTFE Braided	
执行机构 Actuator	多弹簧执行机构 Multi-spring actuator	
低温设计 Low Temperature Design (Option)	最低到 -196℃ Down to -196℃	

低温控制阀流量特性曲线
Cryogenic Control Valve Flow Characterisitic flow chart(Equal percentage/Linear)

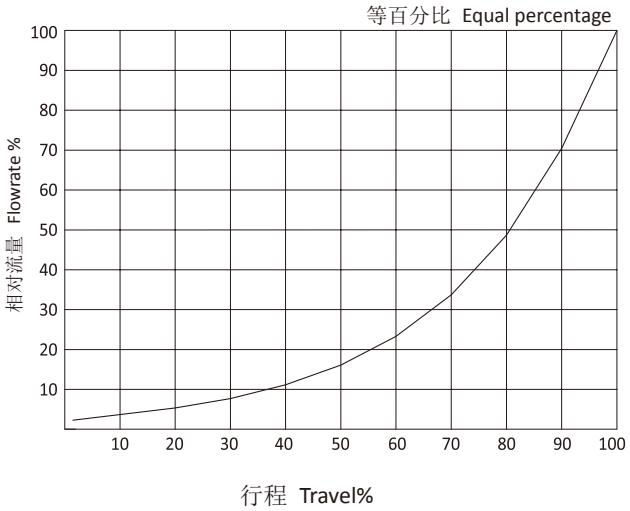

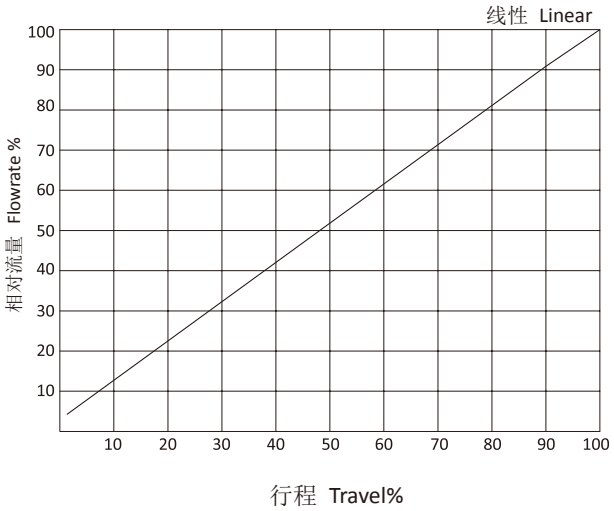

G115,G155 系列低温控制阀技术数据
Technical Data Sheet of G115 and G155 Series Cryogenic Control Valve

低温控制阀结构图及部件图
Sectional Drawing of Cryogenic Control Valve

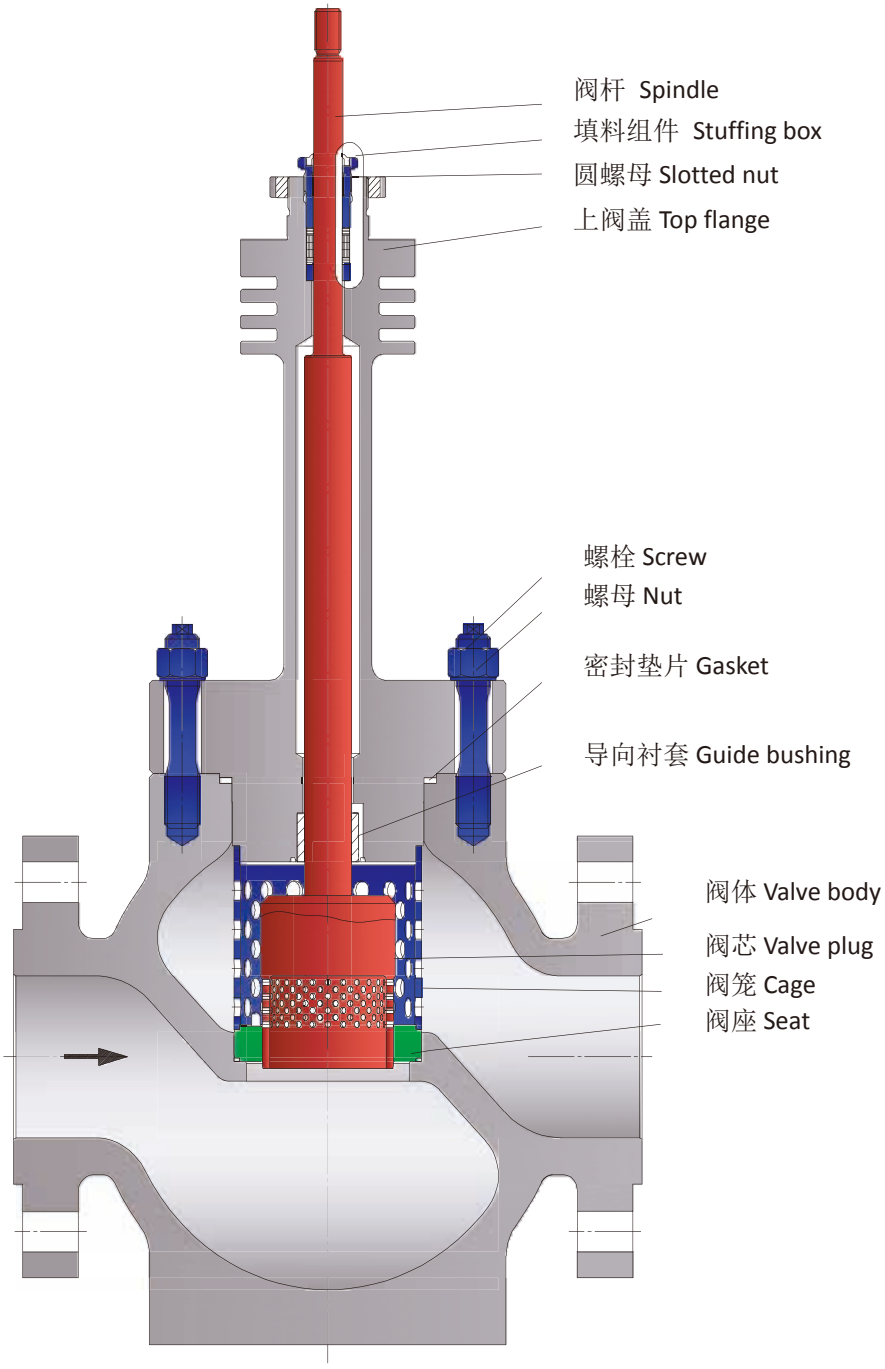

G115,G155 系列低温控制阀技术数据
Technical Data Sheet of G115 and G155 Series Cryogenic Control Valve

G115 系列低温控制阀重量和外形尺寸
Weights and dimensions of G115 Series Cryogenic Control Valve

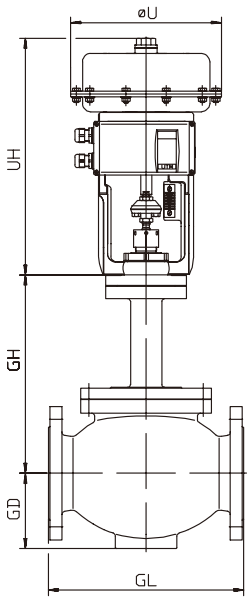

重量和尺寸 Weights and dimensions

G115 系列 G115 series	公称尺寸 DN 压力等级 ANSI NPS		15 1/2''	20 3/4''	25 1''	32 -	40 1 1/2''	50 2''	65 -	80 3''	100 4''
	GL PN10-PN40		130	150	160	180	200	230	290	310	350
	GL Class 150 RF		178	181	184	-	222	254	-	298	352
	GL Class 150 RTJ		-	-	197	-	235	267	-	311	365
	GL Class 300 RF		190	194	197	-	235	267	-	317	368
	GL Class 300 RTJ		202	206	210	-	248	282	-	333	384
	DEK5		** 按需提供 On request								
	GD		48	59	62	70	78	83	93	106	136
UT 型执行机构 Actuator Type UT	ØU	UT I	270								
		UT II	400								
		UT III								400	
	UH	UT I	346								
		UT II	482								
		UT III	618								
	UHV	UT I	508								
		UT II	651								
		UT III	888								
	Weight* ca. kg	UT I	20	22	23	24	31	33	41	70	93
		UT II	45	47	48	49	56	58	66	95	118
		UT III	50	52	53	54	61	63	71	100	123

***) 重量** Weight: **执行机构不含手轮的重量** Actuator weight without hand wheel
****) 按需提供** On request

G115,G155 系列低温控制阀技术数据
Technical Data Sheet of G115 and G155 Series Cryogenic Control Valve

G115 系列低温控制阀重量和外形尺寸
Weights and dimensions of G115 Series Cryogenic Control Valve

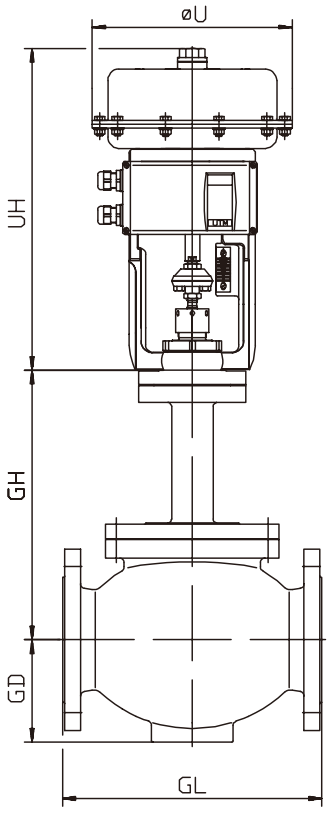

重量和尺寸 Weights and Dimensions

G115 系列 G115 series	公称尺寸 DN 压力等级 ANSI NPS		150 6''	200 8''	250 10''	300 12''	350 14''	400 16''
	GL PN10-PN40		480	600	730	850	980	1100
	GL Class 150 RF		451	543	673	737	889	1016
	GL Class 150 RTJ		463.5	556	-	-	-	-
	GL Class 300 RF		473	568	708	775	927	1057
	GL Class 300 RTJ		489	584				
	DEK5		** 按需提供 On request					
	GD		190	240	305	335	395	445
UT 型 /UTA 型执行机构 Actuator Type UT/UTA	ØU	UT III	400					
		UTA	598					
	UH	UT III	618					
		UTA	1100		1363			1580
	UHV	UT III	888					
	Weight* ca. kg	UT III	200	260				
		UTA	340	400	460	760	850	1500

*) 重量 Weight: 执行机构不含手轮的重量 Actuator weight without hand wheel
**) 按需提供 On request

G115,G155 系列低温控制阀技术数据
Technical Data Sheet of G115 and G155 Series Cryogenic Control Valve

G155 系列低温控制阀重量和外形尺寸
Weights and Dimensions of G155 Series Cryogenic Control Valve

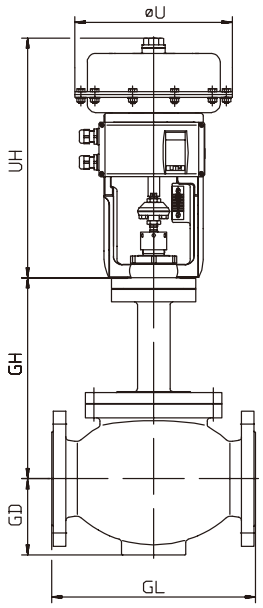

重量和尺寸 Weights and dimensions

根据 DIN EN 1092-1 或 ANSI class 600/900/1500 RF/RTJ 标准的法兰连接的阀门尺寸 (mm) Dimensions (in mm) for valve c/w flanges acc. to DIN EN 1092-1 or ANSI Class 600/900/1500 RF/RTJ									
G155 系列 G155 series	公称尺寸 DN 压力等级 ANSI NPS		25 1“	40 1 ½“	50 2“	80 3“	100 4“	150 6“	200 8“
	GL PN63/100/160		230	260	300	380	430	550	700
	GL PN250		260	300	350	450	520	700	800
	GL Class 600 RF		216	241	292	356	432	559	660
	GL Class 600 RTJ		216	241	295	359	435	562	664
	GL Class 900 RF		254	305	368	381	457	610	737
	GL Class 900 RTJ		254	305	372	384	460	613	740
	GL Class 1500 RF		254	305	368	470	546	705	832
	GL Class 1500 RTJ		254	305	372	473	549	711	842
	DEK5		** 按需提供 On request						
	GD		190	240	305	335	395	445	540
UT 型 /UTA 型执行机构 Actuator Type UT/UTA	ØU	UT I	270						
		UT II	400						
		UT III	400						
		UTA	596						
	UH	UT I	361						
		UT II	482						
		UT III	618						
		UTA	1100						
	UHV	UT I	508						
		UT II	651						
		UT III	888						
	Weight* ca. kg	UT I	34	42					
		UT II	59	67	97	126	161		
		UT III	64	72	102	131	166	322	612
		UTA	204	212	242	271	306	462	752

*) 重量 Weight: 执行机构不含手轮的重量 Actuator weight without hand wheel
**) 按需提供 On request

G115,G155 系列低温控制阀特点
General structures and features of G115 and G155 Series Cryogenic Control Valve

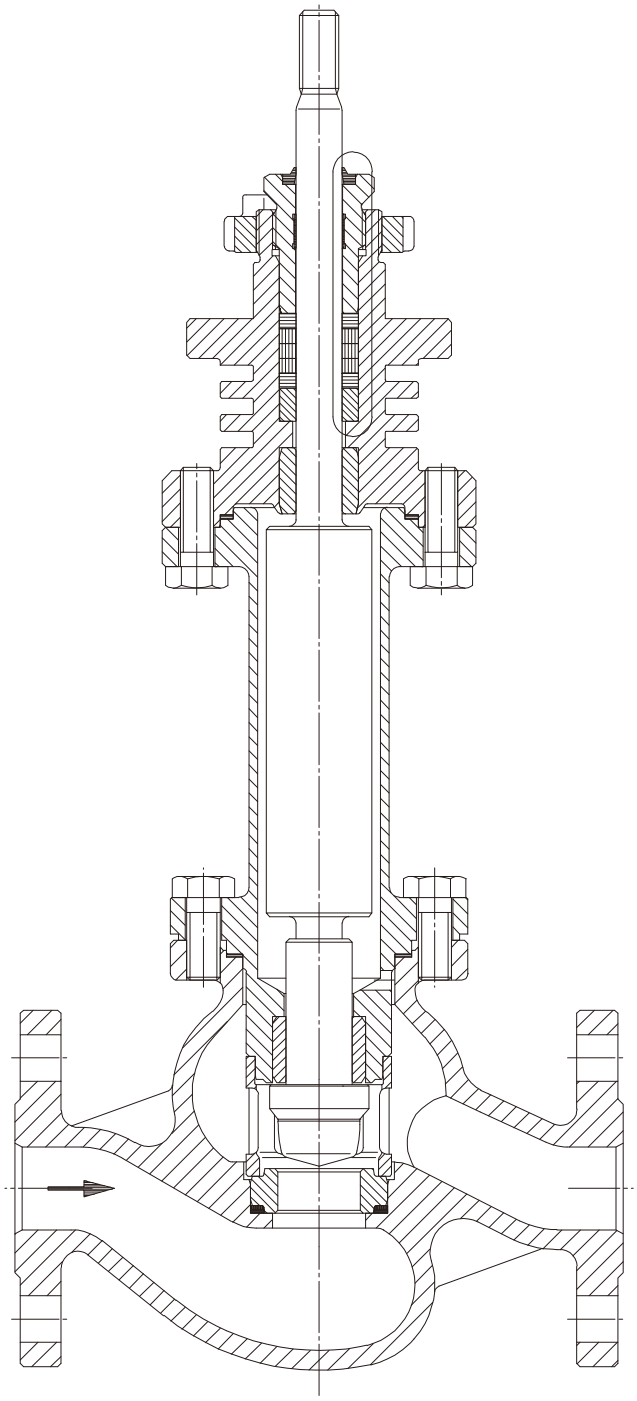

与传统控制阀设计不同的是：艾坦姆低温控制阀的阀芯和阀杆延伸段采用双导向，下导向位于阀座下方，这种设计可以确保更加可靠的密封和减少震动，该种设计中的导向和阀芯能够很容易地更换，每一个被磨损的部件都可以单独更换。阀座通过阀笼实现压紧式固定。上阀盖采用延长式设计，可以保证填料在远离低温介质的情况下正常工作。绝热柱和上阀盖延伸段为薄壁设计可以减少热传导。延伸段的长度根据工况的要求而定。简单的几何组合形式的阀座和阀杆可以使用更加耐磨损的材料。阀座可以双面使用，阀芯为抗震动设计，阀杆可以与阀芯随意搭配，甚至可以采用不同种材料与阀芯配套。

Differ from traditional design, Utmost® cryogenic control valve trim and stem extension adopt double guiding design, which is able to guarantee quick replacement and better sealing force as well as less vibration. The worn parts also be replaced individually. The valve seat is fixed by the retainer. The special designed extension bonnet is able to guarantee the performance of packing set away from cryogenic medium. Insulating valve stem could reduce the heating transfer which designed according to request operation condition. More wear resistant material been selected for seat and stem, formed by simplified geometric design. The valve plug is anti-vibration design. The valve stem could match the plug by various type and material.

G115,G155 系列低温控制阀特点
General structures and features of G115 and G155 Series Cryogenic Control Valve

低温控制阀部件清洁
Parts Cleaning of Cryogenic Control Valve

艾坦姆公司针对低温调节阀，都将严格进行脱脂处理，执行标准遵循 DIN8964“德国 DIN 标准协会研究所冷冻技术 (FNKä) 标准委员会”标准。

For all the cryogenic valves, Utmost is strictly doing the degrease process for each cryogenic valve, following the same standard with DIN 8964 standard.

艾坦姆采用先进的超声波脱脂技术，对所有和低温介质接触的阀门部件进行禁油、脱脂处理。

Adopt advanced sub-sonic degreasing technolygy, all valve parts contact with medium strictly process the degreasing process.

按照标准 DIN 8964-1 规定，可溶解的（油脂和油类物质）残余量不得超过 40 mg/m^2 。

According to DIN 8964-1 standard requirenments, maximum dissolvable grease content should be less than 40 mg/m^2 .

艾坦姆流体控制技术（北京）有限公司拥有自己的无尘车间，所有低温调节阀的脱脂、装配、检测、包装均在无尘车间内完成。

Utmost owned Non-dust room where all the cryogenic valves‘ degreasing,assembling,Inspection, testing and packing process are finished.

G115,G155 系列低温控制阀特点
General structures and features of G115 and G155 Series Cryogenic Control Valve

低温控制阀清洁检测与耐压试验
Cleaning Inspection and Pressure testing of Cryogenic Control Valve

所有低温阀部件均经过严格的清洁检测，使用白炙光进行定性测试，用波长在 0.32 到 0.4 微米的紫外线跟踪检测，再用白色滤纸检测是否还有非荧光碳氢化合物。

All parts of cryogenic valve doing strictly leaning inspection,First qualitative testing process under bright light flowing is the purification tracing with with ultraviolet light of wave lengths between 0,32 µm through 0,4 µm and then adopt white filtrate paper to recognize non-fluorescent carbon.

通过随机检查洁净值是否超出规定的极限来检测清洁过程的有效性，被检验的部分先用蒸馏水喷雾湿润，如果表面（特别是在洗净区域）没有油或油脂，几秒钟内会形成连续水膜，如果有油或者油脂则水膜是不连续的。这个测试与 30 到 60 mg/ m^2 净化极限值是等效的。

Randomly check process to confirm the specified limit of purification is exceeded or not, which process is finished by moisturizing test, the examined part is wetted with of spried distilled water, a continuous aqueous film is formed on the surface for a few seconds if there are no oil or grease, otherwise the film is discontinued especially in the areas of purification. This test is equal to the purification limit of 30 to 60 mg/m^2 .

艾坦姆低温阀在出厂前均采用特殊的耐压试验和泄漏试验，整个试验将在无尘车间进行，采用清洁氮气进行试验，试验标准将依据 DIN 8964 标准进行。同时采用真空包装，严格执行 DIN 8964 标准，确保长期存放时，内部表面存水不得超过 50 mg/ m^2 。

All Utmost®cryogenic valves doing special pressure and leakage testings using clean nitrogen before delivery, the whole process is finished in the Non-dust room, the test is in accordance with DIN 8964 standards. Vacuum packaging to ensure long-term storage, the internal surface of the water less than 50 mg / m^2, which is strictly follow DIN 8964 standards requirements.

Utmost®

品质与艺术完美结合

不仅仅是性能卓越的产品.....
艾坦姆还通过技术方案和综合的售后服务体系，
增强产品价值，为您的工厂提供全面支持！

More than just excellent products!
Utmost also supply technical solution and integrated after service system to increase products value and fully support your factory!

声明：本样本所记载的数值为标准阀门理论值及测量值，数值规格更新恕不另行通知。
Annoucement: The data of this brochure comes from standard valve in theory and measurement, data updates without notice.

艾坦姆流体控制技术（北京）有限公司 Utmost Flow Control Tech.(Beijing) Co.,Ltd

地址：北京市顺义区仁和开发区临河前街29 号 邮编：101300
Add: No.29 of Renhe Qianjie, Renhe Industrial Park, Shunyi district,Beijing. 101300
电话/Tel: 010-80490446/ 80490441
传真/Fax: 010-61406990/6992
邮箱/Mail: sales@utmost-valve.com
网站/Web: www.utmost-valve.com

山东快速反应中心
Quick Response Center of Shandong
地址：山东省枣庄市滕州市腾飞东路1266 号 邮编：277500
Add: No.1266 of Tengfei Road, Zaozhuang City, Tengzhou City,Shandong Province
电话/Tel: 0632-5656159
传真/Fax: 0632-5656159

大连快速反应中心
Quick Response Center of Dalian
地址：大连经济开发区红星海世界观A区11号楼3公建
Add：No. 3 of 11 building Shijieguan of the Red Star A area, Economic Development Zone, Dalian
电话/Tel: 0411-87550166
传真/Fax: 0411-88175365

本艾坦姆样本设计版权和内容归艾坦姆流体控制技术（北京）有限公司所拥有，未经允许任何复制翻印将追究法律责任。